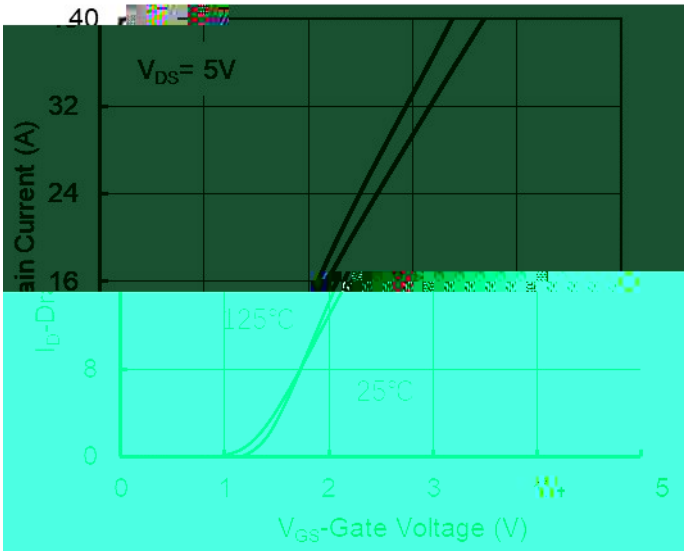
V_{DS}= 5V
125°C
25°C
V_{GS}-Gate Voltage (V)

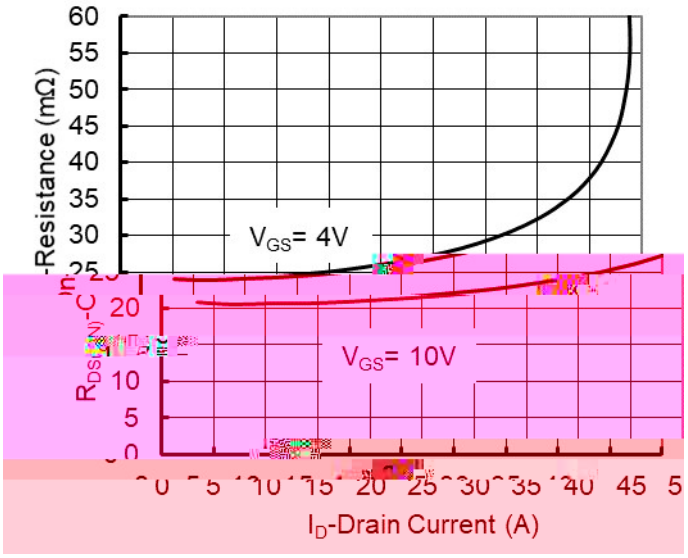
-Resistance (mΩ)
V_{GS}= 4V
V_{GS}= 10V
I_D-Drain Current (A)

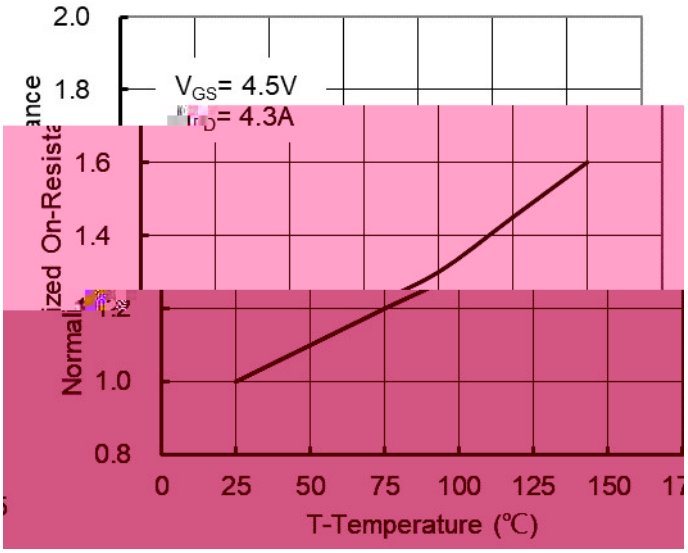
V_{GS}= 4.5V
I_D= 4.3A
T-Temperature (℃)

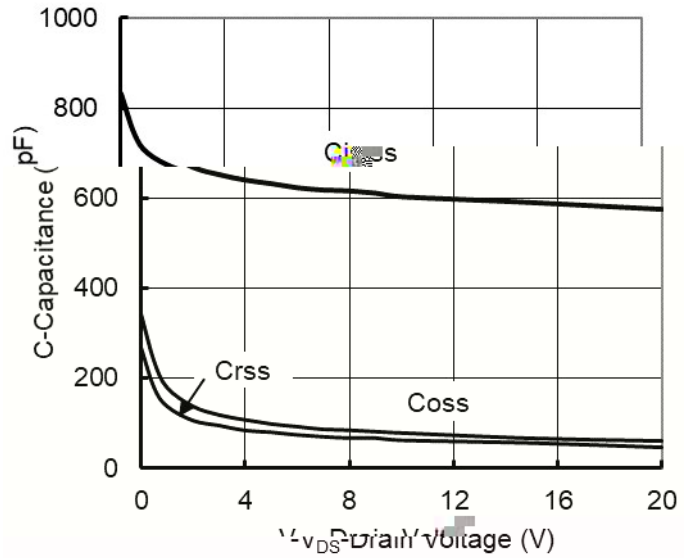
C-Capacitance (pF)
Crss
Coss
V_{DS}-Drain Voltage (V)

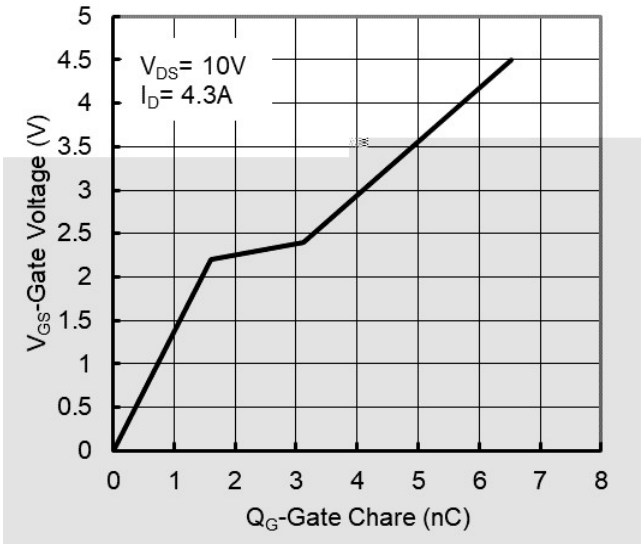
V_{DS}= 10V
I_D= 4.3A
V_{GS}-Gate Voltage (V)
Q_G-Gate Chare (nC)

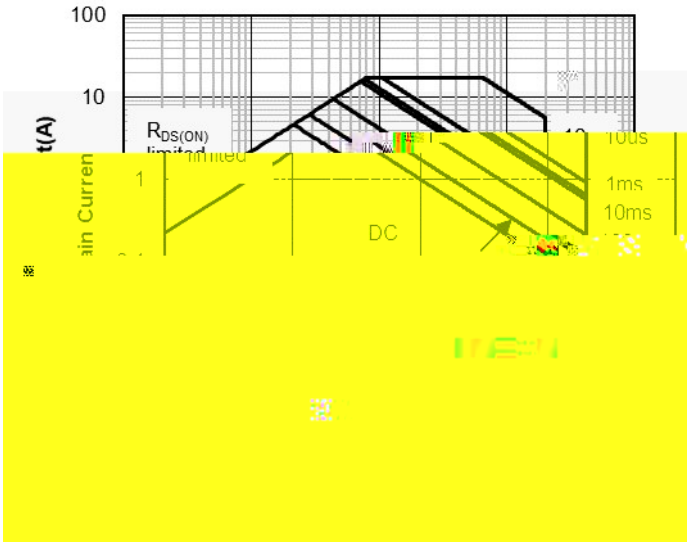
100
10
1
$R_{DS(ON)}$
limited
10us
1ms
10ms
DC

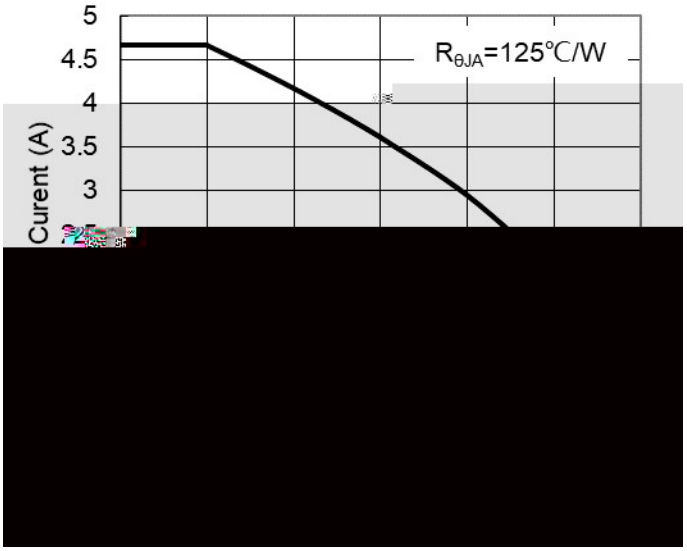
5
4.5
4
3.5
3
Curent (A)
$R_{\theta JA}$=125℃/W

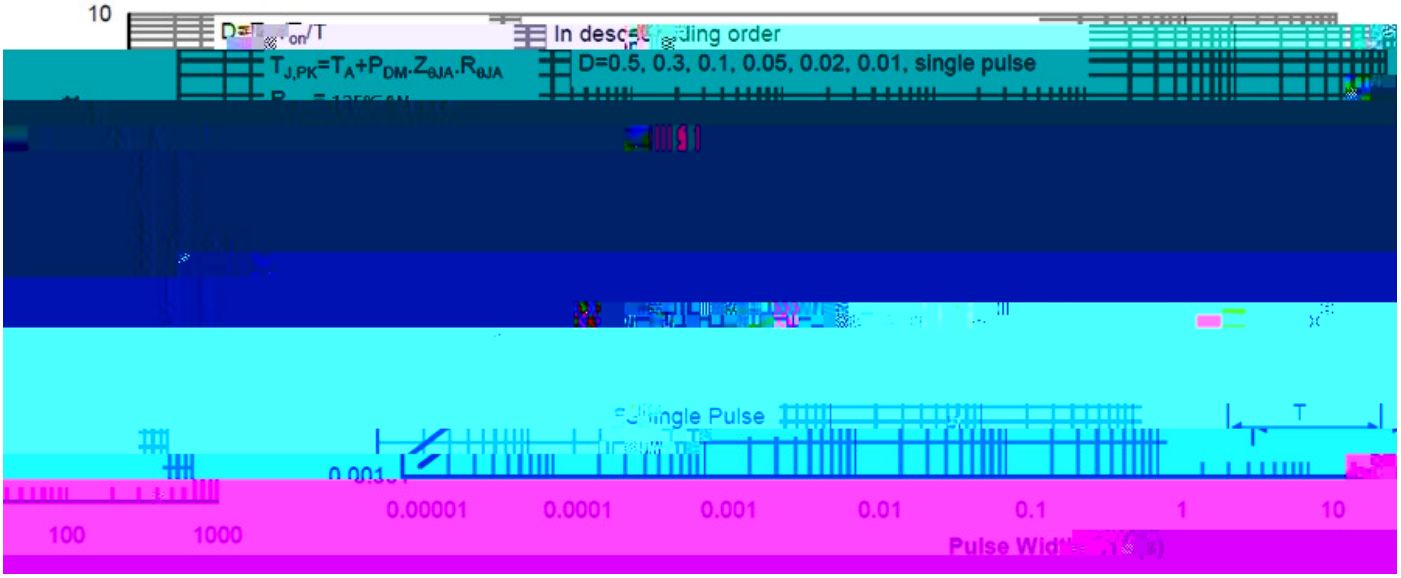
10
In descending order
$T_{J,PK}=T_A+P_{DM}\cdot Z_{\theta JA}\cdot R_{\theta JA}$
D=0.5, 0.3, 0.1, 0.05, 0.02, 0.01, single pulse
Single Pulse
T
0.00001
0.0001
0.001
0.01
0.1
1
10
100
1000

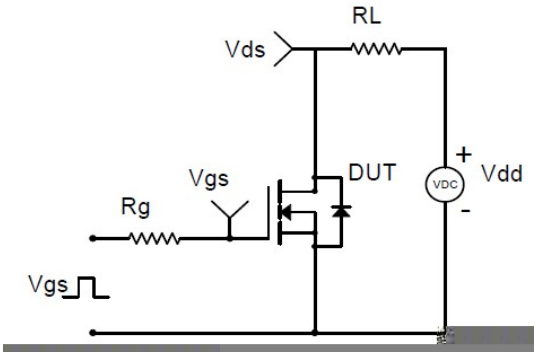
RL
Vds
Vgs
DUT
Vdd
Rg
Vgs

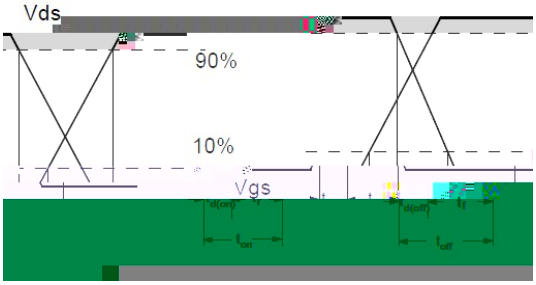
Vds
90%
10%
Vgs

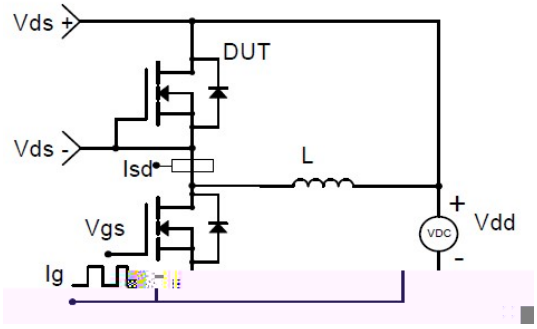
Vds +
DUT
Vds -
Isd
L
Vgs
Vdd
Ig

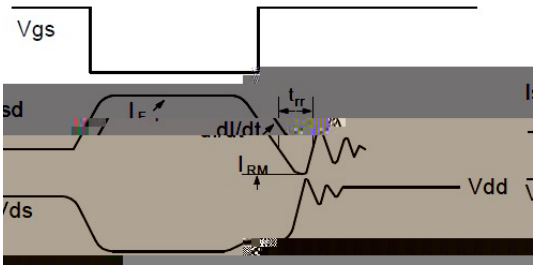
Vgs
Vdd

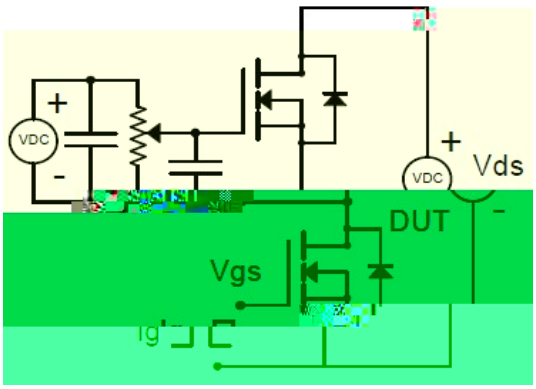
Vds
DUT
Vgs

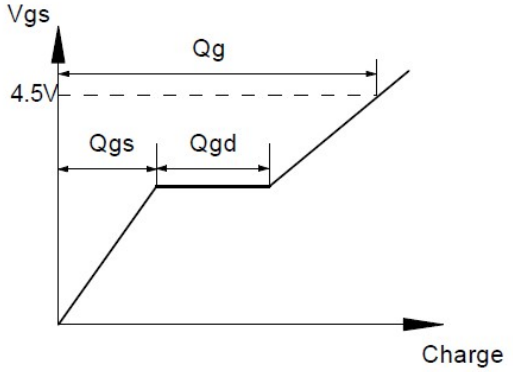
Vgs
Qg
4.5V
Qgs
Qgd
Charge

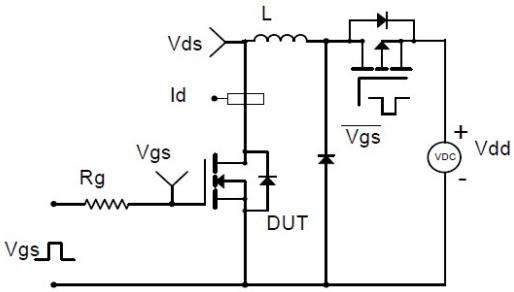
L
Vds
Id
Vgs
Vdd
Rg
DUT
Vgs

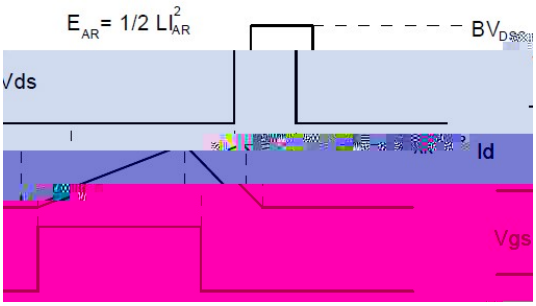
Vds
Id
Vgs

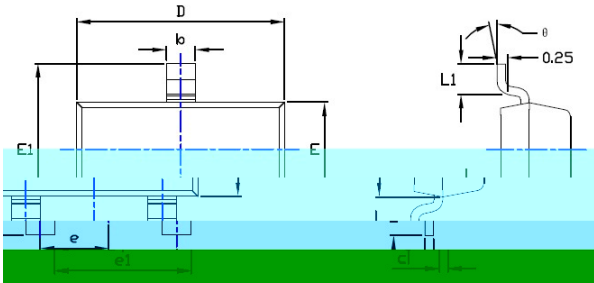

SYMBOL	DIMENSIONS					
	INCHES			Millimeter		
	MIN.	NOM.	MAX.	MIN.	NOM.	MAX.
A	0.0[illegible]	---	0.045	0.900	---	1.150
A1	0.000	---	0.004	0.000	---	0.100
A2	[illegible]	0.038	0.041	0.900	0.975	1.050
b	0.012	0.016	0.020	0.300	0.400	0.500